UNIVERSITY of STRATHCLYDE
ADVANCED NUCLEAR RESEARCH CENTRE

Cross Sector Learning - A Collaborative Research Perspective

Steve Young

Executive Director, ANRC

ADVANCED NUCLEAR RESEARCH CENTRE

The Nuclear Decommissioning Challenge

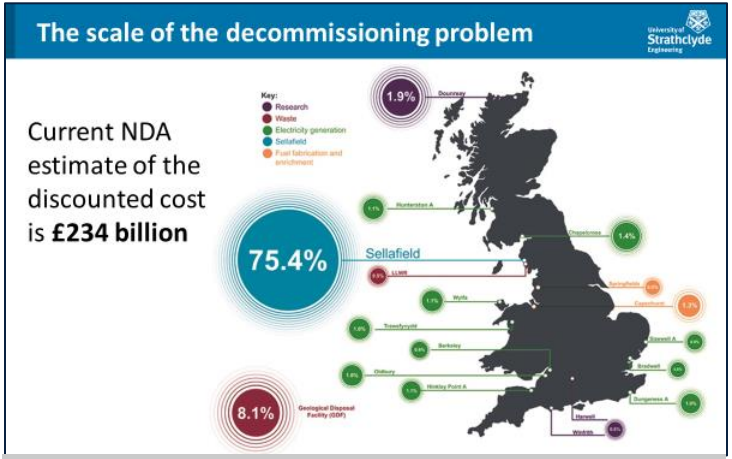

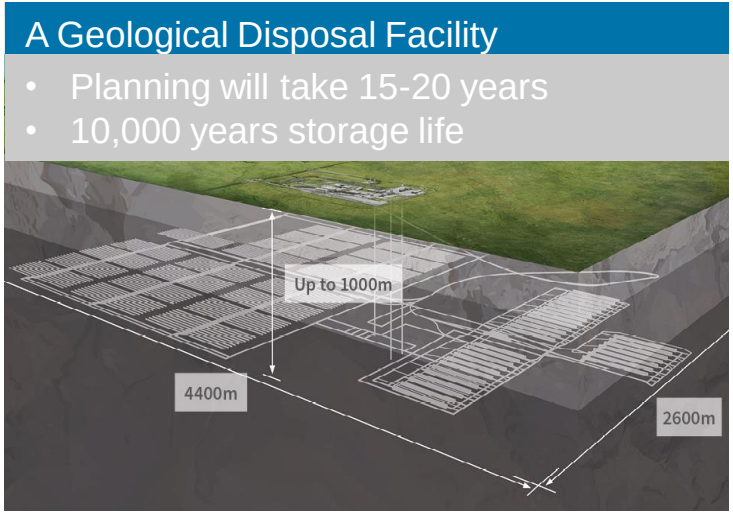

- How to help address the legacy issues of nuclear from its early years?
- How to deliver programme and cost certainty?
- How to ensure next generation nuclear moves forward without the same challenges?
- How to design and build an ultra long life facility?
- How to make end of life a key design criteria?

ADVANCED NUCLEAR RESEARCH CENTRE

The DSRL Challenge

Multiple unique technical and process challenges…

But, stakeholders require programme and cost certainty

Time consuming to maintain an awareness of the world beyond internal DSRL capabilities

Research can offer solutions….

However, each organization in the NDA estate is on its own journey around working with research

ADVANCED NUCLEAR RESEARCH CENTRE

Research - The Opportunity

Universities are a hub of cross sector learning

Research generates genuinely disruptive outcomes rather than provide incremental benefit

DSRL can be a pathfinder for the larger scale challenges at Sellafield

Potential for cost efficiencies through leveraged co-funded R&D programmes

Research conducted within in the right model can be low risk and high gain

Spin off benefits and knowledge sharing that can be gained in collaborative research centres

Post graduate sponsorships are a way on increasing internal capability

ADVANCED NUCLEAR RESEARCH CENTRE

The University of Strathclyde

- A leading International **Technological** Institution
- Largest **Engineering University** in Scotland, second largest in UK
- THES 2014 UK #1 for **Physics** research
- Global client and partnership base
- Part of four **catapult centres**:
  - Offshore Renewable Energy Catapult;
  - High Value Manufacturing Catapult,
  - Transport Systems Catapult and
  - Satellite Applications Catapult

ADVANCED NUCLEAR RESEARCH CENTRE

ANRC: Purpose

Lead the thinking in, to support and accelerate the adoption of state-of-the-art capabilities related to through life management of Nuclear Plant across Design, Manufacture, Operation, Decommissioning and Site End States

We bridge the gap between research and application, strengthening the links between universities and industry to deliver:

- Higher system availability
- Assured life extension
- Reduced through life costs
- Optimal maintenance and equipment replacement programmes
- Efficient, cost-effective radioactive waste management and decommissioning

ADVANCED NUCLEAR RESEARCH CENTRE

ANRC: How We Deliver

- Engage with industry and nuclear organisations
- Identify common objectives
- Generate the right environment for innovation
- Form the right team through collaborations with:
    - Industry (national and international)
    - Academic Partners (national and international)
    - Governments and their agencies
    - Institutional partners
- Focus on delivery as a collaborative team

ANRC: Our Expertise

Industrial informatics

Advanced sensing, sensor systems & condition monitoring

PANAMA

Accelerator technology & beams/atoms research

Risk management, operator decision support & diagnostics

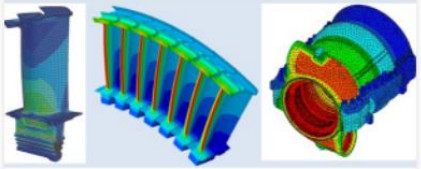

Structural integrity

Materials

Decommissioning & waste management

- system design and build
- data collection, collation and verification
- analytic solutions and decision support
- remediation and operation sustainability
- expert advice / industry and regulatory acceptance

ADVANCED NUCLEAR RESEARCH CENTRE

ANRC: Recent Research Areas

- Innovation in the treatment of radioactive wastes
- Biotechnology for concrete treatment and repair
- Laser particle acceleration
- Compact particle and x-ray beam generation
- Advanced radiographic diagnostics
- Isotope production
- Advanced ultrasonic / optical detectors
- Robotics and autonomous systems
- Smart materials (fluorescent ceramic coatings for temperature measurement, fibre-optic based embedded sensors, magnetic gap filler material)
- AI, machine learning and data analytics
- Advanced image and video processing

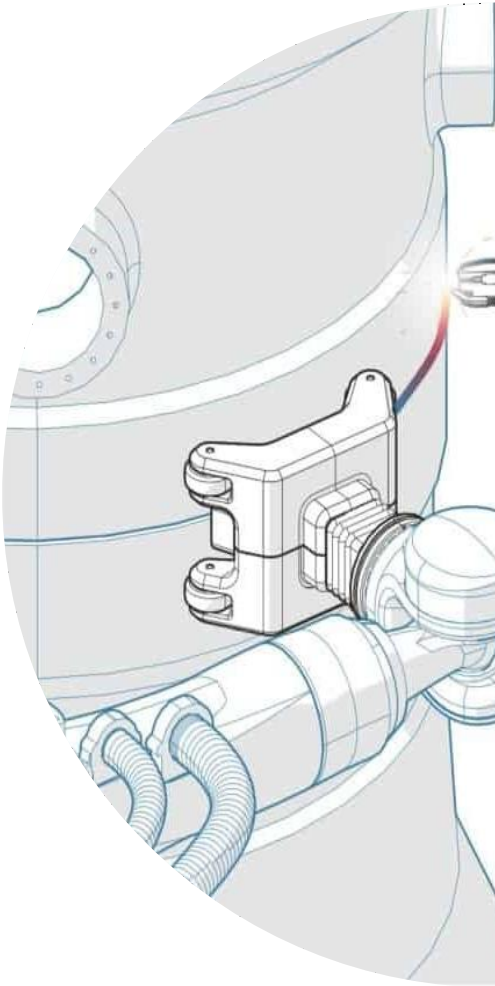

ADVANCED NUCLEAR RESEARCH CENTRE

UNIVERSITY of STRATHCLYDE

ADVANCED NUCLEAR RESEARCH CENTRE

www.strath.ac.uk/research/advancednuclearresearchcentre/